ISSN 2395-1621

Assessment of Fatigue and Modal Analysis of Camshaft

#1V. M. Kalshetti, #2H .V. Vankudre

#1vmkalshetti13.scoe@gmail.com1

#12Department of Mechanical Engineering,
Savitribai Phule Pune University, Pune, Maharashtra.

ABSTRACT

An automotive drive shaft is a rotating shaft that transmits power from the engine to the differential gear of rear wheel drive (RWD) vehicles. Conventional steel drive shafts are usually manufactured in two pieces to increase the fundamental bending natural frequency because the bending natural frequency of a shaft is inversely proportional to the square of the span length. But the two-piece steel driveshaft involves three universal joints, an intermediary thrust bearing and a supporting bracket in its assemblage, which increases the total weight of the vehicle. Since one-piece composite drive shaft will suffice in the place of a two-piece steel driveshaft, it substantially reduces the inertial mass. Moreover, a composite driveshaft can be perfectly designed to effectively meet the strength and stiffness requirements. Since composite materials generally have a lower elasticity modulus, during torque peaks in the driveline, the drive shaft can act as a shock absorber.

ARTICLE INFO

Article History

Received :28th Septmber 2015

Received in revised form :

1st October 2015

Accepted : 5thOctober , 2015

Published online :

6th October 2015

***Keywords*— Drive shaft, Composite material, Carbon fiber.**

I. INTRODUCTION

Camshaft is an important part or component in the engine of automobile vehicles. The function of camshaft is to control the opening and closing intervals of the inlet and exhaust valves using the cams. A cam is a mechanical part of a machine tool which is used to transmit a rotary motion into translating or oscillating motion through a follower using a motion program by direct contact. Camshaft is driven by the engine's crankshaft through idler and timing gears. The gears allows the rotation of the camshaft to correspond with the rotation of the crankshaft allowing the valve openings, valve closing and injection of fuel is timed to occur at desired time intervals. One or more camshafts can be used to increase the flexibility in timing of the valve opening, valve closing and injection of fuel.

Cam - follower systems are widely used in industry and different types of follower systems used to transmit the cam rotary motion through a follower into a translating or oscillating motion. The use of cam - followers are very common and they can be found in different types of machines.

The most popular application for cams is the valve actuation in internal combustion engines. The cam opens and closes the valves through the valve - train by rotation of the camshaft. The valve train model is as shown in Fig 1. The camshaft in an in-line engine is usually found either in the head of the engine or in the top of block running down one side of cylinder bank. When the piston travels below the level of the ports, the ports are "opened" and fresh air or exhaust gasses are able to enter or leave, depending on the type of port. The ports are then "closed" when the piston travels back above the level of the ports.

The camshaft rotates in clockwise direction. Four regions are identified starting from the bottom in a counter-clock wise direction: base circle, opening ramp, nose and closing ramp. Each region is identified by degree locations, starting at 0° at the nose, 60° at the closing ramp, 180° at the base circle, and 300° at the opening ramp. The above mentioned cam lobe terminology is shown in fig 2.

© 2015, IERJ All Rights Reserved

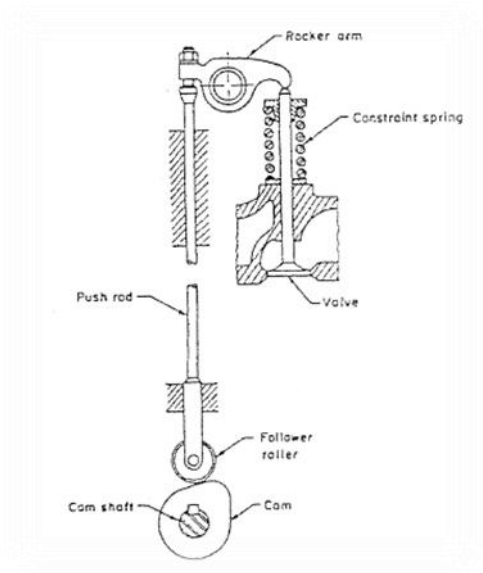

Fig. 1 Valve train model

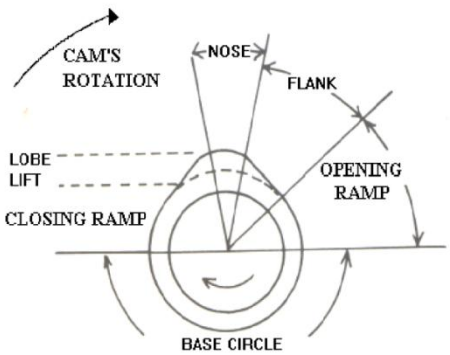

Fig. 2 Cam lobe terminology.

The objective of this work includes the following:

- Fatigue analysis of the camshaft using FEA
- Modal analysis of the camshaft to find natural frequency using FEA
- Validation of fatigue analysis using various fatigue theories
- Validation of modal analysis using Dunkerley's method.

II. ANALYTICAL

This section formulates the various forces acting on camshaft, inlet valve and exhaust valve. For this purpose, specifications of TVS APACHE RTR 180 are considered.

A. *Technical Data:*

a. Engine specification:

Power	=	12.52 kW
Speed	=	8500 rpm
Torque	=	15.5 Nm @ 6500 rpm
Cylinder Volume	=	177.3 cm^3
Bore	=	62.5 mm
Stroke	=	57.8 mm
Compression Ratio	=	9.5:1
Inlet valve opens	=	8° BTDC
Inlet valve closes	=	43° ABDC
Exhaust valve opens	=	45° BBDC
Exhaust valve closes	=	6° ATDC

b. Camshaft Dimensions:

Cam width	=	8 mm
Camshaft diameter	=	25 mm
Bearing diameter	=	35 mm
Cam height	=	34 mm
Base circle diameter	=	28 mm
Total lift of cam	=	7.2 mm

c. Mass of Valve and Valve Accessories:

Inlet valve	=	25 gm
Exhaust valve	=	20 gm
Rocker Arm	=	60 gm

B. *Force Calculations:*

The force calculations are done for the exhaust valve opening, i.e. at an angle of 135°.

The total force acting on cam at the beginning of valve opening is given as follows,

$$F_{max} = F_{v-c} + F_r + F_g$$

Where,

F_{v-}= valve inertia force

= rocker arm inertia force

F_g = gas force

a. Valve inertia force:

$$F_{i-v} = -A_v * M_1$$
$$F_{i-v} = -37.599\ N$$

The valve inertia force is,

$$F_{v-c} = -37.599 * \frac{21.8}{27.1}$$
$$F_{v-c} = -31.599\ N$$

b. Rocker arm Inertia Force:

$$M_r = \text{inertia torque} = (-1) * I * \Psi$$
$$= 0.0003 * 0$$
$$= 0$$
$$F_r = M_r/$$
$$F_r = 0$$

c. Gas Force:

$$\sin \emptyset = \frac{r \sin \theta}{l}$$

We have,

$$r = \frac{s}{2}$$
$$r = 28.9\ mm$$

© 2015, IERJ All Rights Reserved

$$\sin \emptyset = \frac{28.9 \sin 135}{106.45}$$

$$\theta = 11.067°$$

Now,

$$OA = r \sin(\theta + \emptyset)$$

$$OA = 16.1223\ mm$$

We know that,

$$T = F_c * OA$$

$$F_c = \frac{T}{OA}$$

$$F_c = 960.80\ N$$

The Gas Force is calculated as follows,

$$F_{pg} = F_c * \cos \emptyset$$

$$F_{pg} = 942.94\ N$$

Now, the gas force on camshaft is given by,

$$F_{gas} = F_{pg} * \frac{r_1}{r_2}$$

$$F_{gas} = 1172.624$$

Total force acting on cam is,

$$F_{max} = F_{v-c} + F_r + F_{gas}$$
$$F_{max} = 1141.025\ N$$

III. FINITE ELEMENT MODELLING

In this work, the camshaft of TVS APACHE RTR 180 is taken for analysis. Fig 3 shows the 2D diagram of the camshaft. The CAD model of camshaft is imported to ANSYS using IGES file format. The 3D model is tetra meshed as they give enhanced results compared to other elements. This type of element is best suited for regular as well as irregular geometries. The meshed modelled is as shown in fig 5 The camshaft was constrained at the bearing supports and forces were applied on the cam to represent the simply supported camshaft as shown in fig 6.

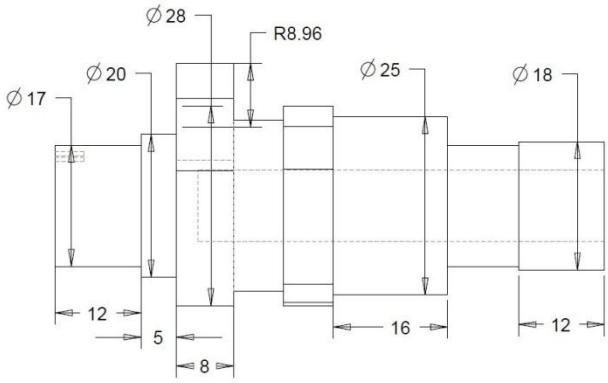

Fig 3. 2D diagram of camshaft

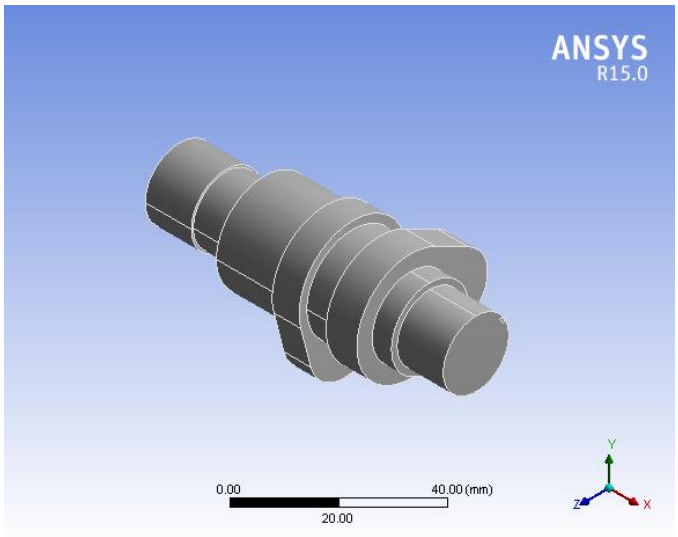

Fig 4. 3D model of camshaft

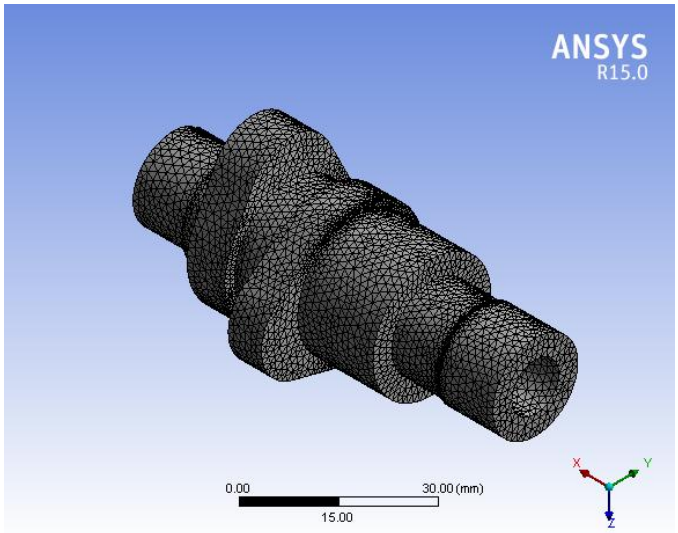

Fig 5. Meshed model of camshaft

© 2015, IERJ All Rights Reserved

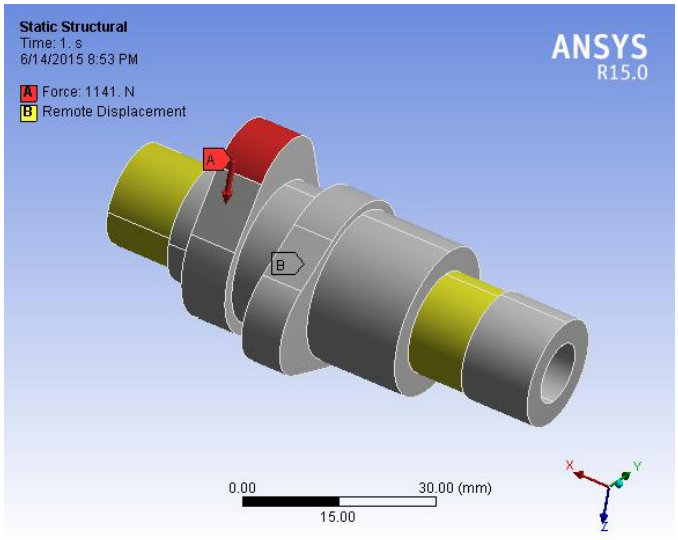

Fig 6. Constraints and Forces on Camshaft

IV.FATIGUE ANALYSIS

a **Theoretical Calculation for Alternating Stress**

The camshaft was considered as a simply supported beam with cams replaced by their equivalent forces acting on the shaft. The free body diagram of the camshaft with the forces acting on it is represented in Figure 7.

The maximum and minimum stresses are 18.3 Mpa and 13.46 Mpa, which gives the mean stress, σ_m of 15.88 Mpa.

Gray Cast Iron (SAE 121 ASTM class 40) was used to manufacture the camshaft. The properties of this material are as in table 1.

Table 1: Material Properties

Property	Value
Yield Stress, S_y	393 MPa
Ultimate Tensile Stress, S_{ut}	293 MPa
Young's modulus, E	120 GPa
Poisson's Ratio, μ	0.25
Endurance limit, S_e	89 MPa

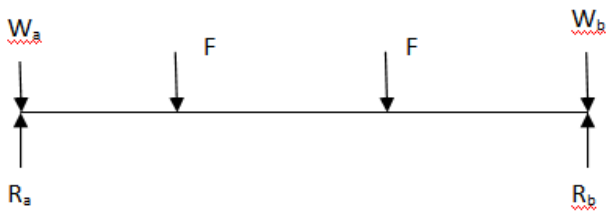

Fig 7 Free body diagram of camshaft

The suggested factor of safety, *n* for the camshaft was between 6 and 8. The factor of safety used for the analytical solution of the alternating stresses is taken as 7.

The alternating stress are found by the following theories:

a. Soderberg Equation:

$$\frac{\sigma_a}{S_e} + \frac{\sigma_m}{S_y} = \frac{1}{n}$$

σ_a 35.67 MPa

b. Goodman Equation:

$$\frac{\sigma_a}{S_e} + \frac{\sigma_m}{S_{ut}} = \frac{1}{n}$$

σ_a 33.43

c. Gerber Equation:

$$\frac{\sigma_a}{S_e} + \left(\frac{n\sigma_m}{S_n}\right)^2 = 1$$

σ_a 36.56

Therefore, the maximum alternating stress in the camshaft is 36.56 Mpa. Thus, the alternating stress produced is less compared to the endurance limit. Hence the camshaft is safe and will not fail for any numbers of cycles.

FEA Analysis to find Alternative Stress

The material properties were assigned to the camshaft and fatigue analysis is performed. The results of fatigue analysis, i.e. alternative stress, fatigue life cycles and factor of safety are shown in fig 8, 9and 10 respectively.

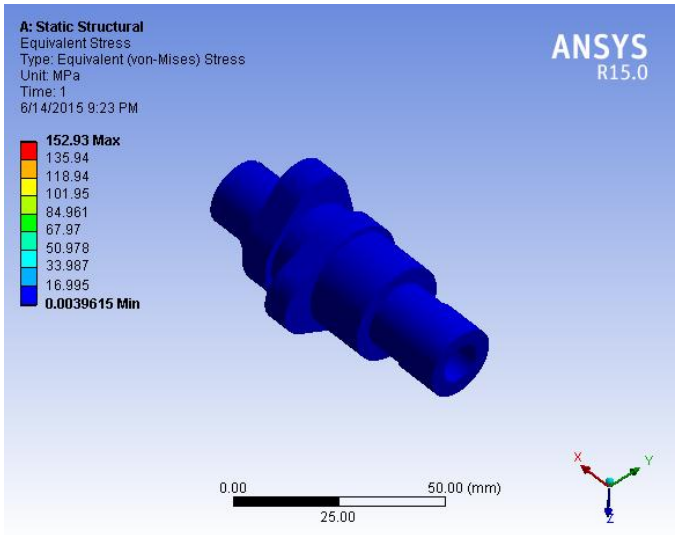

Fig. 8: Alternative Stress in camshaft

© 2015, IERJ All Rights Reserved

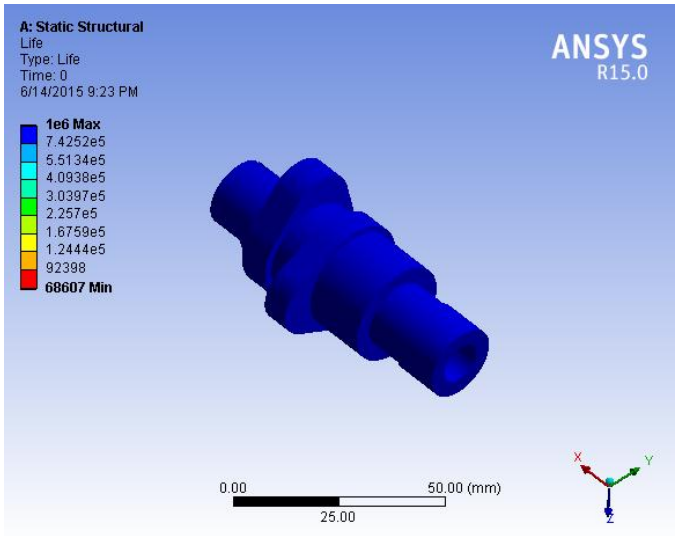

Fig 9: Fatigue life cycles of camshaft

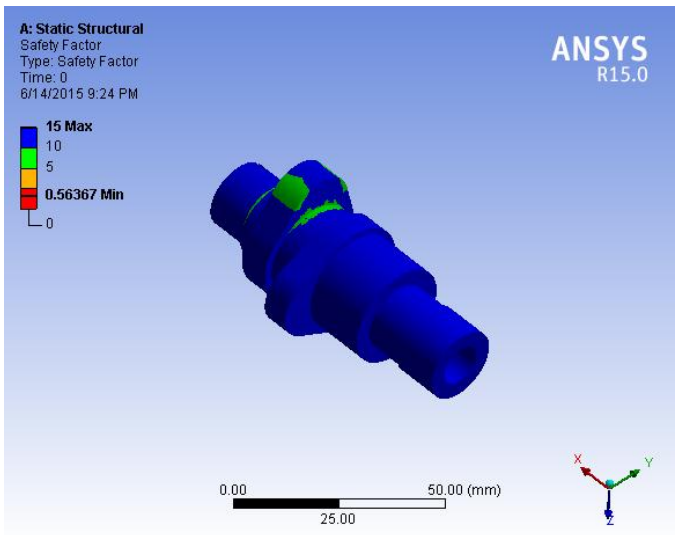

Fig 10: Factor of safety of camshaft

Fatigue Validation

Table 2 shows the comparison of the alternating stress results determined by the theoretical and the ANSYS results. The results agree well with the maximum difference of 7.6% when compared.

Table 2: Comparison of Fatigue results

Fatigue Details	Theoretical results (MPa)			ANSYS results (MPa)	% Diff
	Soderberg	Goodman	Gerber		
σ_a	35.67	33.43	36.56	33.987	7.6

V.MODEL ANALYSIS

The main objective of modal analysis is to obtain natural frequencies and mode shapes. The natural frequencies are calculated using Dunkerley's method and then compared with the analysis results.

Dunkerley's method

Dunkerley's methos is used to find out natural frequencies of camshaft using the following equations:

$$\delta = \frac{W l_1^{\,2} l_2^{\,2}}{3EIl}$$

where δ is the deflection of the shaft at the loading point, W is the force applied, l_1 the distance from the far left of the shaft to the loading point, l_2 is the distance from the loading point to the far right of the shaft, E is the modulus of elasticity, I is the moment of inertia of the shaft and l is the length of the shaft ($l_1 + l_2$).

$$f = \frac{1}{2\pi}\sqrt{\frac{9.81}{\delta}}$$

$$\frac{1}{f_n^{\,2}} = \frac{1}{f_1^{\,2}} = \frac{1}{f_2^{\,2}} = \frac{1}{f_3^{\,2}} = \frac{1}{f_4^{\,2}} = \frac{1}{f_s^{\,2}}$$

Where f_i is the frequency of the cams, f_s is the frequency of the shaft and f_n is the natural frequency of the system.

The results obtained by Dunkerley's method are shown in table 3. The operating frequency is much less than the 1st natural frequency of camshaft i.e.1327.5 Hz, and hence the resonance condition is avoided.

Table 3: Frequency by Dunkerley's method

Items	Values
f_1	3322.9 Hz
f_2	3130.4 Hz
f_3	2850.2 Hz
f_4	2689.8 Hz
f_s	1629.6 Hz
f_n	1327.5 Hz

Modal Analysis in ANSYS

The material properties were assigned to the camshaft model and then modal analysis was done in ANSYS. Figure 11 shows the result of mode shape for the 1st natural frequency of the camshaft. The results of the natural frequencies from ANSYS are given in table 4.

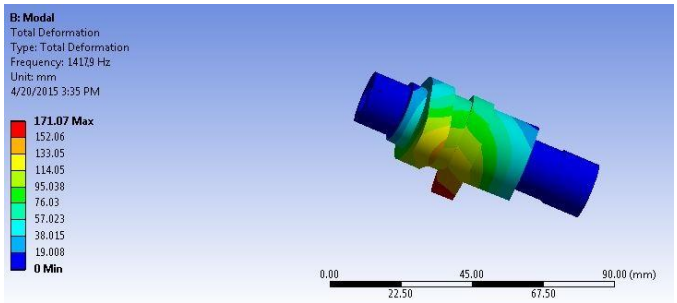

Fig 11. Mode shape for 1st natural frequency of camshaft

Table 4: Natural frequencies of camshaft in ANSYS

Set	Frequency

© 2015, IERJ All Rights Reserved

1	1417.9 Hz
2	1629.6 Hz
3	2689.8 Hz
4	2850.2 Hz
5	3130.4 Hz

Modal validation

Table 5 shows the comparison of analysis results from ANSYS with results obtained by Dunkerley's method. The results show good agreement and differ by 6.8%.

Table 5: Comparison of results

Frequency of camshaft	Dunkerley's method	ANSYS results	% difference
1st natural frequency	1327.5	1417.9	6.8

VI.CONCLUSION

The following conclusion has been summarized based on the study conducted on camshaft:

- The alternating stress calculated by analysis in ANSYS is 33.987 MPa, and that by Gerber theory is 36.56 MPa. The fatigue results shows that the camshaft is safe.
- Comparison of the fatigue results closely match with a difference of 7.6%.
- Modal results show that the natural frequency by Dunkerley's method is 1327.5 Hz. When compared with the analysis results, it is concluded that the analysis is compatible with difference of 6.8%.

ACKNOWLEDGEMENT

It is my pleasure to present a paper on "Assessment of Fatigue and Modal Analysis of Camshaft". Acknowledge with a deep sense of gratitude, the encouragement received from my teacher and guide Prof. (Dr.) H. V. Vankudre. He took keen interest in checking the details of the paper and guided me with amicable assistance and inspiration. It is my pleasure to acknowledge, the sense of gratitude to Prof. (Dr.) C.S.Pathak for his guidance and encouragement in project work.

REFERENCES

[1] Vivekanandan.P , Kumar. M, Modelling, "Design and Finite Element Analysis of Cam Shaft" International Journal of Current Engineering and Technology, ISSN pp. 2277 – 4106, July 2012

[2] R. V. Wanjari, T. C. Parshiwanikar, "Design and Analysis of Camshaft by Changing Parameters which Causes Failure" International Journal of Science and Modern Engineering (IJISME) ISSN: pp. 2319- 6386, Volume-1, Issue-6, May 2013

[3] Santosh Patil, S. F. Patil and Saravanan Karuppanan, "Modal and Fatigue Analysis of a Camshaft using FEA" International Journal of Applied Engineering Research ISSN pp. 0973-4562 Volume 8, Number 14 (2013)

[4] A.S.Dhavale ,V.R.Muttagi Muttagi "Study of Modelling and Fracture analysis of Camshaft", International Journal of Engineering Research and Applications ISSN: pp. 2248-9622

[5] G.K. Matthew., D. Tesar.(1976), "Cam system design: The dynamic synthesis and analysis of the one degree of freedom model, Mechanism and Machine Theory", Volume 11, Issue Pages 247-257.

[6] Shigley, J. E., Mischke, C. R. and Budynas, R.G., 2004, Mechanical Engineering Design, 7th Edition, McGraw-Hill.

[7] The Federation of Motor Sports Clubs of India, 2012 FMSCI Homologation Form, TVS APACHE RTR 180, 212MC003

© 2015, IERJ All Rights Reserved